Data Sheet

Article number: 2301078512R
Description: E+G handwheel
VRTP.100-A12

Measures

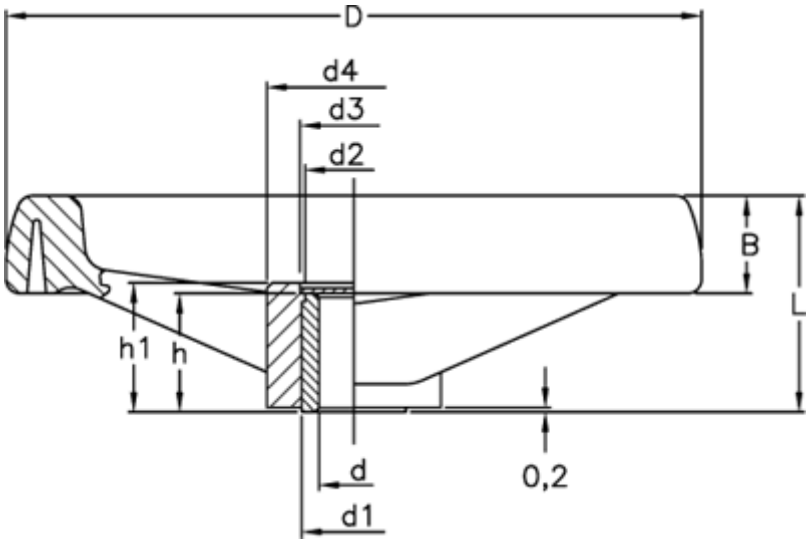

B	= 20	h	= 17
C (N m)	= 54	h1	= 19
D	= 99	L	= 37
d1	= 18	L (J)	= 7
d2	= 16		
d3	= 17		
d4	= 25		
d H7	= 12		

Product drawings and brochures of any kind may contain errors for which Brd. Klee A/S cannot be liable.